WHEELRESTORE

WMASM

User manual

Version 20250701

This Manual is published by:

Wheel Restore Company ApS
Hobrovej 963
DK9530 Stoevring
Denmark

Tel: +45 7022 7070
Email: info@Wheel Restore.com

Reproduction of the contents of this publication, fully or in part, is forbidden in accordance with copyright laws without prior written permission from Wheel Restore Company ApS.
This applies to any form of reproduction through printing, duplication, photocopying, etc.

© Wheel Restore Company ApS, Denmark, 2025

1 – Introduction

Dear technician,

We are confident that you will enjoy working with your new WMASM – ASM Aluminium Spraying Machine

We would like to hear about your experiences with the WMASM. A few words concerning the things that have made an impression on you - positive or negative - would be of great help to us in our efforts to improve our products to an even higher standard. If you have any questions or need additional products, we will assist you with further advice.

If you have any other types of questions, we refer to our Service & Support platform at www.support.Wheel Restore.com. Use your login provided at initial training.

Thank you.

Aluminium Spraying Machine (ASM)
Part no. WMASM

TABLE OF CONTENTS

1. SAFETY RULES, DESCRIPTION OF SYMBOLS 3
2. PURPOSE AND DESCRIPTION OF THE DEVICE 4
3. SPECIFICATIONS 4
4. DESCRIPTION OF FRONT PANEL, REAR PANEL, HEATER 5
5. BEFORE STARTING WORK 6
6. INSTRUCTIONS FOR SPRAYING MATERIAL 7
7. APPEARANCE, CONNECTION AND CURRENT OPERATION OF THE DEVICE 8
   a. WORKING CONDITIONS
   b. PRECAUTIONS
   c. MAINTENANCE
8. WARRANTY CONDITIONS 11

1. SAFETY RULES, DESCRIPTION OF SYMBOLS

It is imperative that you familiarize yourself with the following markings and safety rules to protect your own health and life and that of others.

Read the instructions before operating the appliance. Use only the original equipment provided by the manufacturer.

Put on eye protection

Wear hearing protection

Put on protective gloves

Put on an anti-dust mask

Remark! Hot surface!

2. PURPOSE AND DESCRIPTION OF THE DEVICE

The ALUMINIUM SPRAYING MACHINE (ASM) device is used for spraying aluminum powders using the Cold Gas Spray (CGS) method. This technology allows for the application of protective, regenerative and anti-corrosion coatings on metal and ceramic surfaces.

3. SPECIFICATIONS

a. Rated Voltage: 220-240V
b. Current frequency: 50/60 Hz
c. Maximum heater power: 3300 W
d. Spray Surface Heating Temperature: 0-250 degrees Celcius
e. Heater Operating Temperature: 0-500 degrees Celcius
f. Working pressure: 6-8 Bar
g. Air flow: 0.45 m3/min
h. Weight: 7 kg
i. Heater body temperature not more than 50 degrees Celcius
j. Noise level: 75 dB

4. DESCRIPTION OF FRONT, REAR, HEATER PANEL

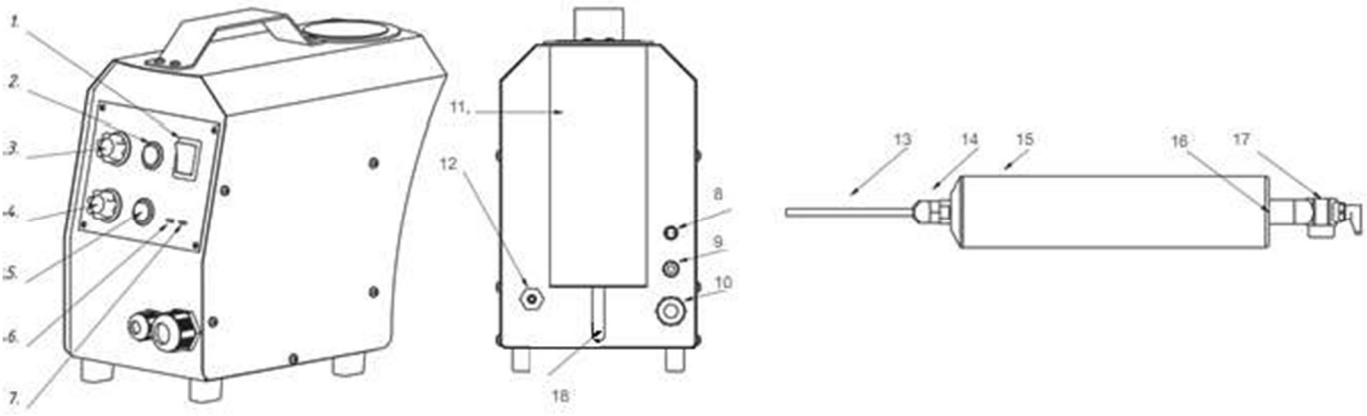

Fig.1 Description of the device

1. Device power button
2. Heating on/off button
3. Smooth heating regulation
4. Smooth adjustment of powder feeding
5. Powder on/off button
6. A green indicator indicates that the device is ready for operation
7. A red indicator indicates an emergency shutdown of the device
8. Electrical connection of the powder tank
9. Fuse against overheating of the device
10. The power cord of the appliance
11. Tank for powder
12. Compressed air connection
13. Variable nozzle
14. Fixed nozzle
15. Heater
16. Button to feed powder from the tank
17. Compressed air tap on/off

5. BEFORE STARTING WORK

1) Connect the appliance to a 230 V socket.
2) Connect the compressed air to the machine (position 12)
3) Open the air supply tap on the heater (position 17) and make sure that the air supply system has a stable pressure, not lower than 6-8 bar, acceptable. (Technical data p.3.)

The air supply system and the consumption that the device needs is 0.45 m3/min. Working pressure from 6 to 8 bar. It is necessary to install a moisture-oil separator and a filter to prevent water and oil from entering the heater of the unit. Failure to use filters will damage the heater. On the control panel, the readiness of the device is signalled by a green indicator (position 6). If the pressure is below the acceptable level, the green indicator will not illuminate.

4) Plug the powder tank (position 11) into the socket on the appliance (position 8).
5) Connect the powder supply hose (position 18) to the tank.
6) Press the powder feed button (position 16).

The tank will vibrate, the dosing rod in the tank will start to rotate and feed the material into the heater. The powder supply is adjusted individually by means of a knob (position 4) for stepless adjustment of the material quantity.
Red indicator (position 7) indicates emergency stop of the equipment

REMARK!

Under no circumstances should the heater or the device be hit or thrown.
The machine must be in an upright position for the powder feeder to function properly.

7) During breaks in operation or before the end of work, it is imperative to turn off the preheating (position 2) and leave a minimum air supply for 1 minute to cool down the heater.

6. INSTRUCTIONS FOR SPRAYING MATERIAL

In these guidelines, we describe a new approach to the restoration of parts and spraying of anti-corrosion material. Along with the equipment, a video on how to use the device is available.

a. Sandblasting with corundum.

Surface cleaning can be carried out with Top Coat Compound.

i. Fill the tank with Top Coat Compound. Always start with a small amount to understand how the equipment works.
ii. Turn on the unit and plug in the air. We recommend not using temperature or using temperature mode 1 to 3 to remove rust from the surface more effectively.
iii. At the end of the work, empty the container — pour the remaining powder back into the container. Therefore, to do this, unplug the feeder. Reinstall the empty feeder in the same order.

b. Powder Spray

We recommend filling the feeder container with a small amount of powder before using the equipment for the first time.

- Fill the tank with powder.
- Set the temperature with the dial (position 3) from 3 to 7.

The higher the temperature, the greater the porosity of the surface. To fill in the holes in the body or aluminum parts, use the temperature mode 5-7.

7. APPEARANCE, CONNECTION AND CURRENT OPERATION OF THE DEVICE

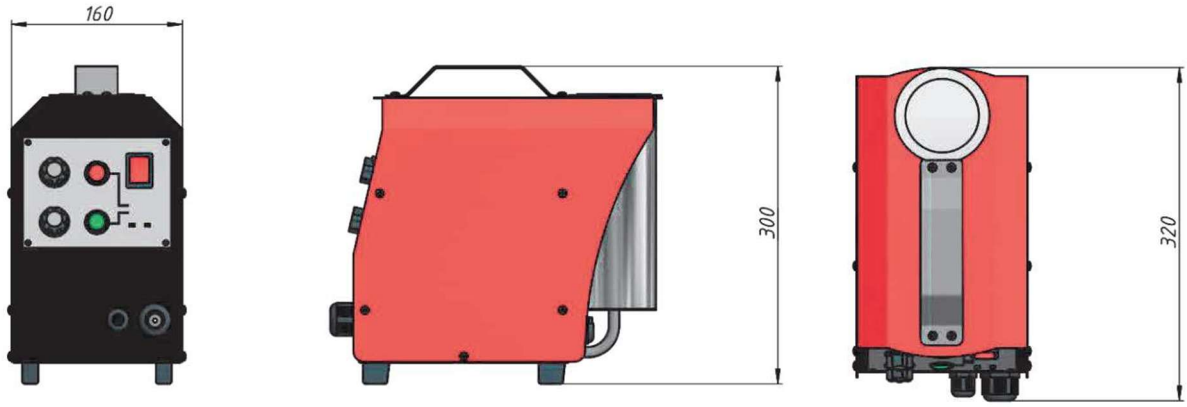

Fig.1 Appearance and size of the device

A. WORKING CONDITIONS

Optimal ambient temperature between -20 and 40 degrees Celcius
Avoid spraying in direct sunlight and rain, and do not allow water to get inside the device. Work in an environment of flammable gases, aggressive gases and dust should be avoided.

B. PRECAUTIONS

a. Personal protection:

Always use personal protective equipment, such as:

- **Safety glasses** – protect the eyes from metal powder particles.
- **Dust mask** – protects the respiratory tract from dust.
- **Protective gloves** – prevent skin irritation.
- **Hearing protectors** – recommended for prolonged work in noisy environments.

b. Caution with the heater:

i. Avoid touching the heater nozzle during operation, as it can reach temperatures up to 400 degrees Celcius
ii. After operation, leave the appliance for a minimum of 1 minute in a cooling state with the airflow on.

c. Maintaining the position of the device:

i. The machine must be used in an upright position to ensure proper operation of the powder feeding system.

d. Protection against water and moisture:

i. Never allow the appliance to come into contact with water.
ii. Make sure the work room is dry and properly ventilated.
iii. Working with flammable materials:
   1. Do not use the appliance in an environment where gases or flammable substances are present.

e. Emergency Shutdown:
   i. If a red malfunction indicator appears, turn off the device immediately and check the cause.

f. Device Storage:
   i. After finishing work, store the appliance in a dry and cool place, away from children and unauthorized personnel.

g. Instructions for use:
   i. Make sure that each operator of the device has been trained in its use and is familiar with the safety rules.

C. MAINTENANCE

Remove dust regularly with clean, compressed air. If the device works in smoky conditions, in heavily polluted air, remove the accumulated dust every day. The compressed air pressure should be maintained at such a level as not to damage small parts of the device max. 2-4 bar.

REMARK!

Check the variable nozzle as it is in constant contact with the pressurized powder. For longer operation, it is worth turning the variable nozzle in several stages, every half hour of work, so that the inner tube is parallel.

RECYCLING AND DISPOSAL

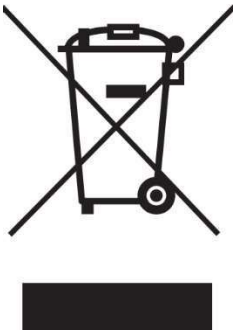

An electrical appliance should not be disposed of with household waste. Such a product must go to a separate collection point, where it will undergo recovery and recycling processes. Please contact your distributor for advice on recycling.

Warranty conditions

1. **Warranty Coverage**

The guarantor ensures the correct operation of the Aluminium Spraying Machine (ASM), if it is used in accordance with the rules set out in the user manual and that all safety precautions are followed.

2. Warranty period
   The warranty period is 12 months from the date of purchase of the device.
3. Disclaimers of Warranties
   The warranty does not cover defects resulting from:
   a. improper use,
   b. use contrary to safety rules and user manuals,
   c. incorrect selection of the product for the application,
   d. improper assembly, maintenance, storage or transport of the device,
   e. mechanical, chemical, thermal damage or intentional damage to the device,
   f. neglect regular maintenance, including cleaning the device and replacing consumables.
4. Exclusions for consumable parts
   The warranty does not cover parts subject to normal wear and tear, such as:
   a. filters, fuses, consumables and other elements subject to wear and tear during the operation of the device.
5. Void of warranty
   The buyer loses the right to the warranty in the following cases:
   a. any modifications to the device or interference of unauthorized persons have been found
   b. the device was used without the use of an air dryer and filtration system
   c. the use of a moisture-oil separator in accordance with the manufacturer's recommendations has been neglected,
   d. The device was used in a position other than vertical, which could cause damage to the powder delivery system.
6. Complaints procedure
   The basis for considering the complaint is to fill in the Failure Report Form, which should be provided together with the proof of purchase of the device.
7. Reminder
   The guarantor reserves the right to refuse warranty repair in the event of non- compliance with the rules set out in the user manual, including:
   a. neglect to clean the device regularly,
   b. work in conditions of excessive moisture or dust without an appropriate filtration system,
   c. Damage to the heater due to contamination of the air system with water or oil.

Important information:
To maintain your warranty, make sure that:

- The compressor is always equipped with a suitable dryer and air filter,
- The appliance is maintained in accordance with the manufacturer's recommendations.

2 - Disclaimer

General Safety Guidelines for Aluminium Spraying Machine (ASM)

Authorized Personnel:
Only authorized and properly trained personnel should operate or interact with the Aluminium Spraying Machine (ASM). Untrained individuals may be at risk of injury or damage when working with the Aluminium Spraying Machine (ASM).

Read and Follow Instructions:

Thoroughly read and understand all provided instructions, manuals, safety guidelines, and warnings associated with the Aluminium Spraying Machine (ASM). Adhere to the recommended operating procedures and safety precautions.

Training and Familiarization:

Ensure that all personnel operating or working with the Aluminium Spraying Machine (ASM) receive comprehensive training on its safe operation, programming, and maintenance. Familiarize yourself with the Aluminium Spraying Machine (ASM)'s specific features and limitations.

Risk Assessment:

Conduct a thorough risk assessment of the work environment and tasks involving the Aluminium Spraying Machine (ASM). Identify potential hazards and implement appropriate safety measures to mitigate risks, such as barriers, safety interlocks, or protective enclosures.

Personal Protective Equipment (PPE):

Wear the required PPE, such as safety glasses, gloves, hearing protection, anti dust-mask and protective clothing, as specified for the specific Aluminium Spraying Machine (ASM) and its associated tasks. Additional PPE may be necessary based on the work environment.

Restricted Access:

Control access to the Aluminium Spraying Machine (ASM)'s workspace to authorized personnel only. Ensure that non-essential personnel are kept at a safe distance from the Aluminium Spraying Machine (ASM) during operation to prevent accidents or interference.

Tooling and Fixtures:

Follow proper procedures for installing, securing, and removing tooling or fixtures on the Aluminium Spraying Machine (ASM). Ensure that they are correctly aligned, fastened, and suitable for the intended tasks to prevent accidents or equipment damage.

Maintenance and Inspection:

Regularly inspect the Aluminium Spraying Machine (ASM) for signs of wear, damage, or malfunction. Follow the manufacturer's recommended maintenance schedule and promptly address any issues or faults to maintain the Aluminium Spraying Machine (ASM)'s optimal performance and safety.

Communication and Collaboration:

Establish clear communication channels and protocols when working with the Aluminium Spraying Machine (ASM) in a shared workspace. Coordinate tasks with other personnel to prevent conflicts and ensure safe collaboration.

Power and Energy Sources:

Exercise caution when working with power sources or energy systems connected to the Aluminium Spraying Machine (ASM). Follow proper lockout/tagout procedures when performing maintenance, repairs, or accessing electrical components.

Reporting Safety Concerns:

If any safety hazards or concerns related to the Aluminium Spraying Machine (ASM) are identified, report them immediately to the appropriate personnel or supervisor. Do not operate the Aluminium Spraying Machine (ASM) if there are unresolved safety issues.

Product Liability Disclaimer

Proper Use and Maintenance:

a. Users are responsible for using the product in accordance with the provided instructions, manuals, and guidelines.
b. Regular maintenance, inspection, and servicing of the product are necessary to ensure its continued safe and effective operation.
c. Failure to follow proper use and maintenance procedures may result in personal injury, property damage, or other adverse consequences for which Wheel Restore cannot be held liable.

Assumption of Risk:

a. Use of the product involves inherent risks, and users assume full responsibility for these risks.
b. Users acknowledge that Wheel Restore cannot control or predict all potential circumstances or conditions under which the product may be used, and therefore, users accept any associated risks.

Product Suitability:

a. It is the responsibility of users to determine the suitability of the product for their specific needs, requirements, and intended applications.
b. Wheel Restore provides product information, specifications, and recommendations to the best of its knowledge and abilities, but it does not guarantee the product's suitability for any particular purpose.

Third-Party Components or Modifications:

a. Wheel Restore may incorporate third-party components or parts into its products. The performance, reliability, or safety of these components is subject to the respective manufacturer's specifications and warranties.
b. Any modifications or alterations made to the product by the user or any third party without explicit authorization from Wheel Restore may void warranties and release Wheel Restore from liability.

Limitation of Liability:

a. To the maximum extent permitted by applicable law, Wheel Restore shall not be liable for any direct, indirect, incidental, consequential, or special damages arising from the use, misuse, or inability to use the product, including but not limited to personal injury, property damage, loss of profits, or interruption of business operations.
b. The total liability of Wheel Restore for any claim related to the product shall not exceed the purchase price paid by the user for the product.

Indemnification:

a. Users agree to indemnify, defend, and hold harmless Wheel Restore, its employees, agents, and affiliates from any claims, demands, damages, liabilities, and expenses, including reasonable attorney fees, arising out of or in connection with the use or misuse of the product.

Product Modifications and Discontinuation:

a. Wheel Restore reserves the right to modify, improve, or discontinue its products without prior notice, and shall not be obligated to provide retrofitting or updates to previously sold products.

Applicable Laws and Jurisdiction:

a. This disclaimer shall be governed by and construed in accordance with the laws of the jurisdiction in which Wheel Restore operates. b. Any disputes arising from or in connection with this disclaimer shall be subject to the exclusive jurisdiction of the courts in the forementioned jurisdiction.

By using the product, users acknowledge that they have read, understood, and agreed to comply with this product liability disclaimer. Users should consult legal or professional advice, if they have any concerns or questions regarding their rights, responsibilities, or obligations related to the use of the product.

13 – Service and Support

Service and support require a service ticket. Wheel Restore offers a service ticket system.
Yearly maintenance can be requested and set up as an event with notifications.
SAS system (Service & support system)
Additional information can also be found in the Wheel Restore Knowledge base here: SAS Knowledge base

We have a network of appointed sales distributors in nearly every country around the world. Therefore, and to support you the best possible way, we kindly ask you to follow the relevant option below:

Contact your local sales distributor in your country
Send order to us at order@hbc-system.com
Please note that, if we have an appointed sales distributor in your country, your order will be forwarded to the sales distributor.

14 – Disposal

If the machine is bought: The machine is separated and sorted according to local environmental requirements.

Reproduction of the contents of this publication, fully or in part, is forbidden in accordance with copyright laws without prior written permission from Wheel Restore Company ApS.
This applies to any form of reproduction through printing, duplication, photocopying, etc.

© Wheel Restore Company ApS, Denmark, 2025